BASE

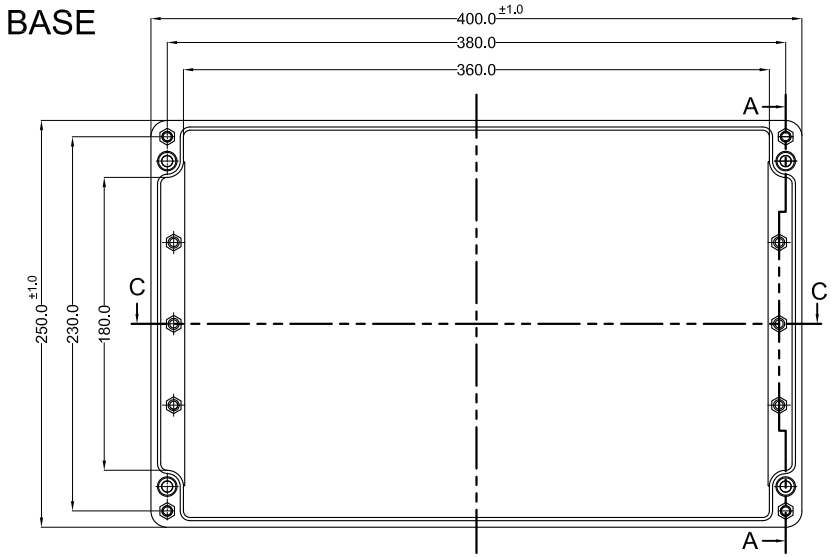

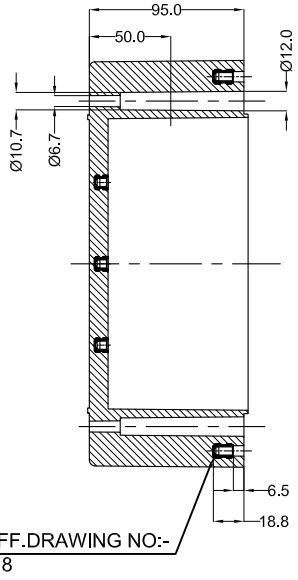

FOR INSERT REFF. DRAWING NO:-
M6 BRASS _A/F 9 X 8.5

FOR INSERT REFF.DRAWING NO:-
M6 S.S_A/F9X12.8

SECTION A-A

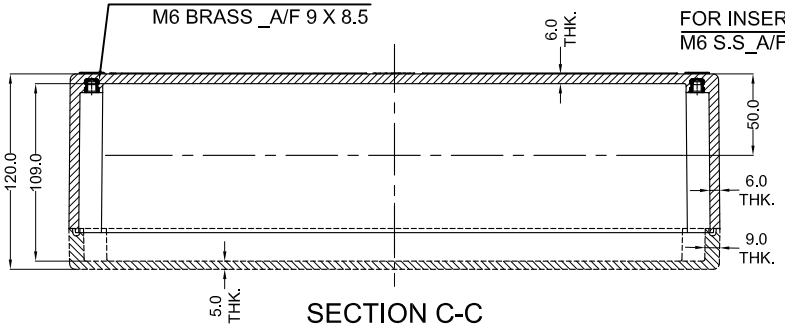

SECTION C-C

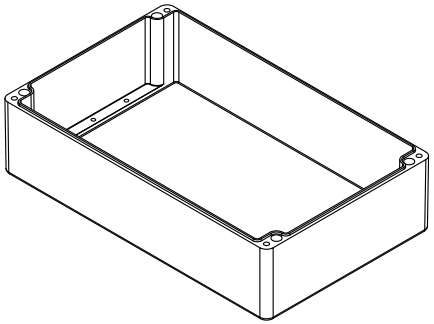

Opening Detail (Size)	Equivalent throgh hole dia for Gland with Earthing Plate mm	NO OF HOLES SIDE A/B	Min. Distance between the opening for Side A/B (mm)	NO OF HOLES SIDE C/D	Min. Distance between the opening for Side C/D (mm)	Opening Detail (Size) PG	Equivalent throgh hole dia for Gland with Earthing Plate mm	NO OF HOLES SIDE A/B	Min. Distance between the opening for Side A/B (mm)	NO OF HOLES SIDE C/D	Min. Distance between the opening for Side C/D (mm)	Opening Detail (Size) NPT	NO OF HOLES SIDE A/B	Min. Distance between the opening for Side A/B (mm)	NO OF HOLES SIDE C/D	Min. Distance between the opening for Side C/D (mm)	Min. Distance of last opening from the enclosure end on side A/B (mm)	Min. Distance of last opening from the enclosure end on side C/D (mm)
M12	12	42	8	28	8	Pg.7	12.5	40	8.5	30	8.5	1/4" NPT	42	10	28	10	28	39
M16	16	30	9	22	9	Pg.9	15.2	30	9	22	9	3/8" NPT	30	10	22	10	29	39.5
M20	20	20	8	12	8	Pg.11	18.6	24	8.5	12	8.5	1/2" NPT	20	10	12	10	28	39
M25	25	16	12	9	12	Pg.13.5	20.4	18	8.5	10	8.5	3/4" NPT	16	14	9	14	32	41
M32	32	10	16	9	16	Pg.16	22.5	12	10	10	10	1" NPT	10	18	9	18	36	43
M40	40	5	20	3	20	Pg.21	28.3	10	13	8	13	1-1/4" NPT	5	22	3	22	40	45
M50	50	4	21	3	21	Pg.29	37	7	17	4	17	1-1/2" NPT	4	21	3	21	41	45.5
M63	63					Pg.36	47	4	20	3	20	2" NPT					41	45.5
						Pg.42	54	3	21	2	21						38	44
						Pg.48	59.3											

NOTE :-

1) MACHINING DIMENSIONS TOLERANCE - ISO 2768-m

2) ALL EDGES ARE BURR FREE

3) HOLE AND THREADED HOLES PERPENDICULAR TO THE BOX FACE

PROPERTY OF RaychemRPG (P) LTD.
ALL RIGHTS RESERAVED AND/OR PHOTOCOPYING THIS DOCUMENT
TO A PERSON WITHOUT RaychemRPG (P)LTD. WRITTEN AUTHORIZATION IS PROHIBITED

Sr.No.	Drawing no.	RM Grade	Finish
3	GASKET	-	SILICONE
2	GJB-400250120-B-02	SMC-808-30	BLACK RAL9011
1	GJB-400250120-B-01	SMC-405-23	GREY RAL7000

LID

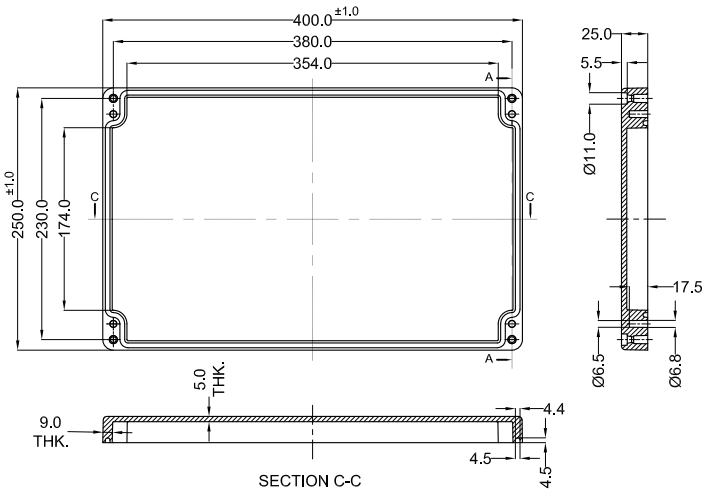

SECTION C-C

GENERAL SPECIFICATION AND AREA CLASSIFICATION:

1. STANDARDS - IEC/EN 60079-0, IEC/EN 60079-7 & IEC/En 60079-31.
2. MATERIAL - GRP - GLASS REIGNFORCE POLYESTER - SHEET MOLDING COMPOUND
3. DEGREE OF PROTECTION IP66 AS PER IEC 60529 : 1989 +A1 : 2000
4. GASKET MANUFACTURER - WACKER CHEMIE AG, MODEL: CENUSIL R 150 AND - CONTINOUS OPERATING TEMPERATURE AS - 70°C TO 200°C
5. GLASS % - 30% FOR Ex HOUSING ; DENSITY - 1.7 to 1.9 g/cm2 ; IMPACT - 7J
6. SERVICE TEMPERATURE RANGE : - 50 °C to +100 °C
7. ALL DIMENSIONS ARE IN mm. UNLESS STATED OTHERWISE.
8. STANDARD COLOUR - BLACK
9. THE JUNCTION BOX WILL BE MARKED WITH

II 2 G Ex e IIC Gb

II 2 D Ex tb IIIC Db IP 66 IP

0539 DEMKO 13 ATEX XXXXXXXU
IECEx UL 13.XXXXU

10. TIGHTENING TORQUE - (1-2) NM

11. EXTERNAL / INTERNAL EARTHING CONDUCTOR CROSS SECTION 4mm² To 35 mm²

NO.	REV.NO.	DESCRIPTION	DATE	DRAWN	CHECKED
-	-	-	-	-	-

QUANTITY	MATERIAL :-	MACH.NAME	DATE	SIGN	NAME	
-	———	-			RRPL	DESIGN
			31/03/15		RAJESH	DRAWN
		TITLE :- Ex TYPE GRP JUNCTION BOX 400 x 250 x 120	31/03/15		G.K.	CHECKED
			31/03/15		J.B.	APPROVED

TOLERANCE: - DIMENSIONS; - HOLES; - ANGLES

WEIGTH : - FINISH : -

ALL DIMENSION ARE IN MM

GRJ 15

Raychem RPG (P) Limited
Ceat Mahal Annexe,
Dr. Annie Besant Road ,
Worli , Mumbai 400030
Web : www.raychemrpg.com

SCALE | MODEL NO. ExGRJ 15

REV 0 | DRG. NO. Ex-GRJ 15-400250120-U